JUNCTION BOX

TR-JB03-G-IN

Specification	Description
Application	Junction box for wall installation of fixed dome cameras
Dimensions (L×W×H)	Φ 108.6 x 36mm (Φ4.28 x 1.42”)
Weight	0.2kg (0.44lb)
Material	Aluminum Alloy

Dimensions

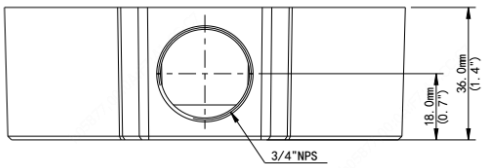

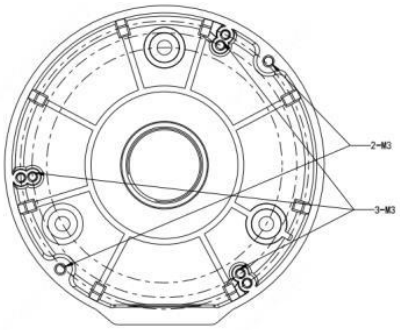

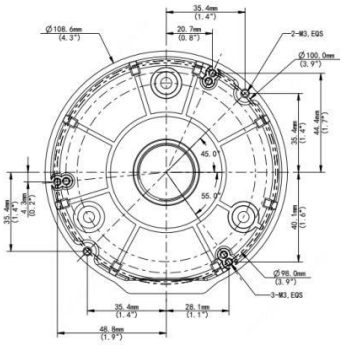

Uniview Technology / 850 Freeport Pkwy, Ste. 100, Coppell, TX 75019
Toll Free: 888-288-7644 / Main 972-459-8645 / Fax 972-459-8661
©2022 uniview tec All rights reserved. Specifications and Design are subject to change without notice.