JUNCTION BOX

TR-JB03-H-IN-BK

Specification	Description
Application	Junction box for wall installation of turret cameras: IPT428B & IPT528B
Dimensions (L×W×H)	Φ 126 x 36mm (Φ4.96 x 1.42”)
Weight	0.24kg (0.53lb)
Material	Aluminum Alloy

Dimensions

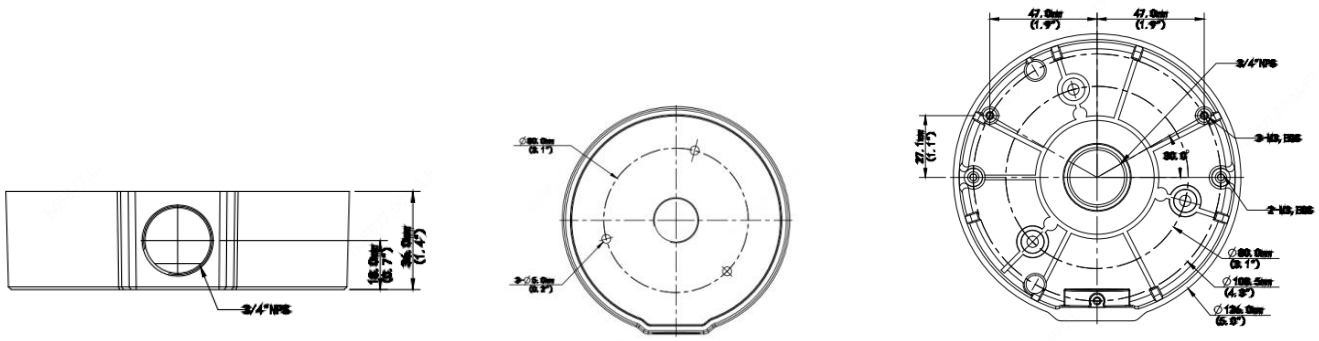

Uniview Technology / 850 Freeport Pkwy, Ste. 100, Coppell, TX 75019
Toll Free: 888-288-7644 / Main 972-459-8645 / Fax 972-459-8661
©2020 uniview tec All rights reserved. Specifications and Design are subject to change without notice.
UVT6410120-00