4MP, TRUE DAY/NIGHT, WDR, IR VANDAL DOME

Varifocal Lens Vandal Dome

IPV4212M

- Exceptional Video Quality with 4MP, 2592 x 1520 Resolution
- Super-Efficient H.265 Video Compression for Drastically Reduced Bandwidth and Storage Requirements
- Powerful, Smart IR LED Lights for 0Lux Night Time Operation up to 98 Feet
- 2.8 ~ 12mm motorized varifocal, automatic focus lens
- TRUE Day/Night and WDR functionality for all Lighting Conditions
- Two-way Audio, Corridor View, Backlight Compensation and 3D DNR (Digital Noise Reduction)
- Triple Video Streams; ONVIF Profile S Compliant
- Powerful Video Analytics such as Behavior, Exception, Identification and Statistical
- PoE & 12VDC Power Options
- Built-in Micro-SD Card Slot enables local storage up to 256GB
- IP67 Weather Resistant and IK10 Vandal Resistant Rated Vandal Housing
- Composite Video Output for Test Monitor
- Optional Wall and Pendant Mounts Available
- Supported by uniview tec Guard Station Software and Guard Viewer Mobile App's for iPhone and Android Devices

IPV4212M Vandal Dome

IP CAMERAS

Specifications

Camera	
Sensor	1/3", progressive scan , 4 megapixel, CMOS
Lens	2.8~12 mm, varifocal automatic focusing and motorized zoom lens
Angle of View (H x V)	91.0° ~ 27.0° x 54.4° ~ 13.7° (Wide ~ Tele)
Shutter	Auto/Manual, 1/6 ~ 1/100000 s
Minimum Illumination	Color: 0.005 Lux (F1.4, AGC ON); 0 Lux with IR
Day/Night	IR-cut filter with auto switch (ICR)
Digital noise reduction	2D/3D DNR
IR LED Range	Up to 30m (98 ft) IR range
WDR	120dB
Video Compression	Ultra 265, H.265, H.264, MJPEG
H.264 code profile	Baseline profile, Main Profile, High Profile
Maximum Frame Rate / Stream	Main: 4MP (2592 x 1520)@ 20fps; or (2560 x 1440) @25fps; or 3MP (2048 x 1520) @ 30fps Sub: 2MP (1920 x 1080) @ 30fps Third Stream: D1 (720×576) @ 30fps
HLC, BLC, 9:16 Corridor, Defog	Supported
OSD, Privacy Mask, Motion Detection & ROI	Up to 8 areas
Network	
Protocols	IPv4, IGMP, ICMP, ARP, TCP, UDP, DHCP, PPPoE, RTP, RTSP, RTCP, DNS, DDNS, NTP, FTP, UPnP, HTTP, HTTPS, SMTP, 802.1x, SNMP
Compatible Integration	ONVIF (Profile S, Profile G), API
Network	RJ45, 10M/100M Base-TX Ethernet
Video Analytics	Behavior, Exception, Identification, Statistical
Local & Network Storage	Micro-SD, up to 256GB; ANR
General	
Power	12VDC +/- 25%, PoE (IEEE802.3 af); Power consumption: Max 7.2W
Dimensions (Ø x H) & Weight	Φ148 x 113.3mm (Ø5.8 x 4.4”); 0.75kg (1.7lb)
Audio I/O & Compression	1 / 1: G711 Compression
Alarm I/O	1 / 1
Video Output	1 BNC, impedance 75 Ω; amplitude 1 V [p-p]
Operating Temperature & Humidity	-40°C ~ +60°C (-40°F ~ 140°F); Humidity: 10%~ 95% RH (non-condensing)
Conformity Certifications	IP67, IK10; CE, FCC

Dimensions

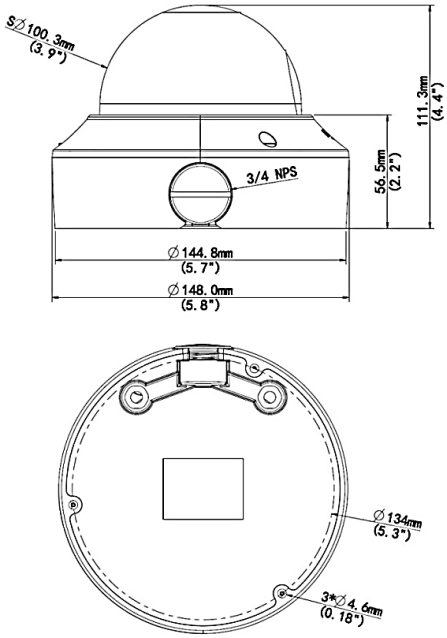

Accessories

See Camera Accessories Guide

Uniview Technology / 850 Freeport Pkwy, Ste. 100, Coppell, TX 75019
Toll Free: 888-288-7644 / Main 972-459-8645 / Fax 972-459-8661
©2021 uniview tec All rights reserved. Specifications and Design are subject to change without notice.
UVT7031217-05